DOMINO V2
Bill Loading Procedure

Domino V2 is designed to count up to 1200 bills per minute, positioning it as one of the quickest and most economical back-loading mixed value counters on the market. To prevent issues such as jamming, misfeeding, or tearing of bills, employing the correct procedure for loading bills is crucial. For optimal performance, it is advised to limit the counting to no more than 200 bills at a time.

Kolibri advises using the following technique for bill loading:

1. Adjust the bill guides to a size slightly wider (0.10” on each side) than the width of the bills in the stack (all US dollar denomination are the same size).

2. Correct or remove the bills if they are severly wrinkled, damaged or folded. Avoid counting bills that are excessively dirty, soiled, folded, curled or with foreign material like clips, bands, etc. Bills such as these can cause the machine to malfunction.

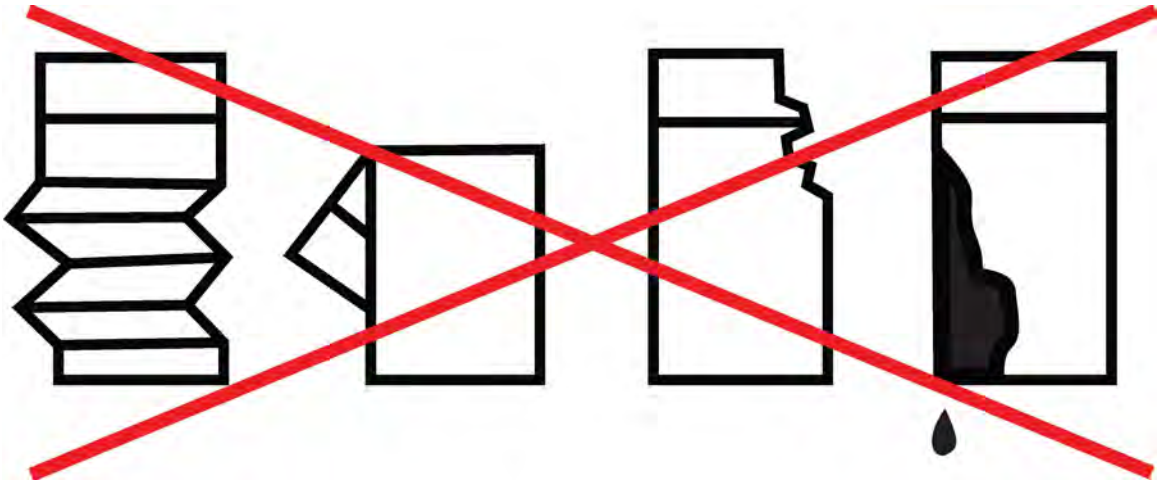

3. Square the stack as shown below:

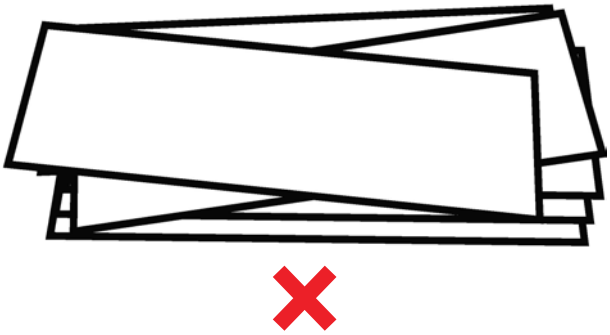

© 2025 Kolibri USA

DOMINO V2
Bill Loading Procedure

4. Switch to manual mode, start with 100 bills at a time, place the stack of bills directly bill guide plate. Follow these instructions until you have fully mastered the bill loading technique. Flip the bill stack towards the rear of the machine so the stack is now leaning against the bill guide plate. Flip the bill stack towards the rear of the machine so the stack is now leaning against the bill guide plate.

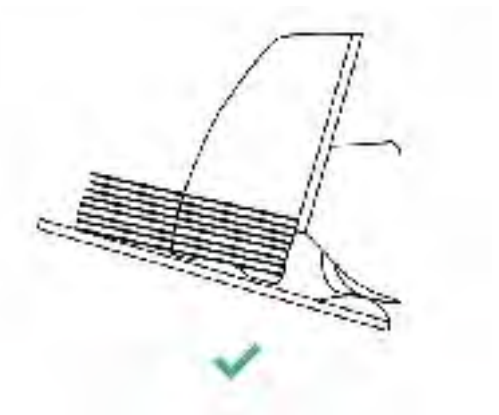

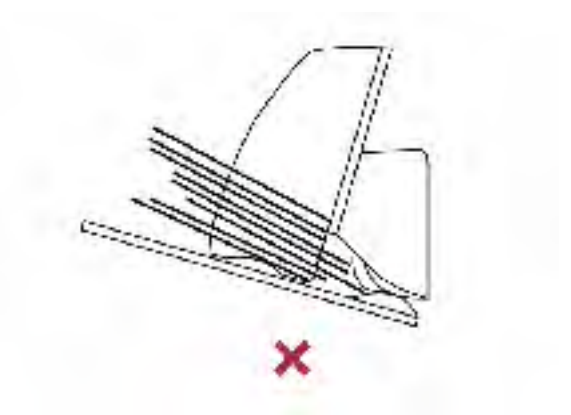

IF, after... using the recommended bill loading method, this does not resolve the issue, please see the support section on the Kolibri USA website at www.KolibriUSA.com, or contact Kolibri Support at support@KolibriUSA.com for further troubleshooting.

© 2025 Kolibri USA